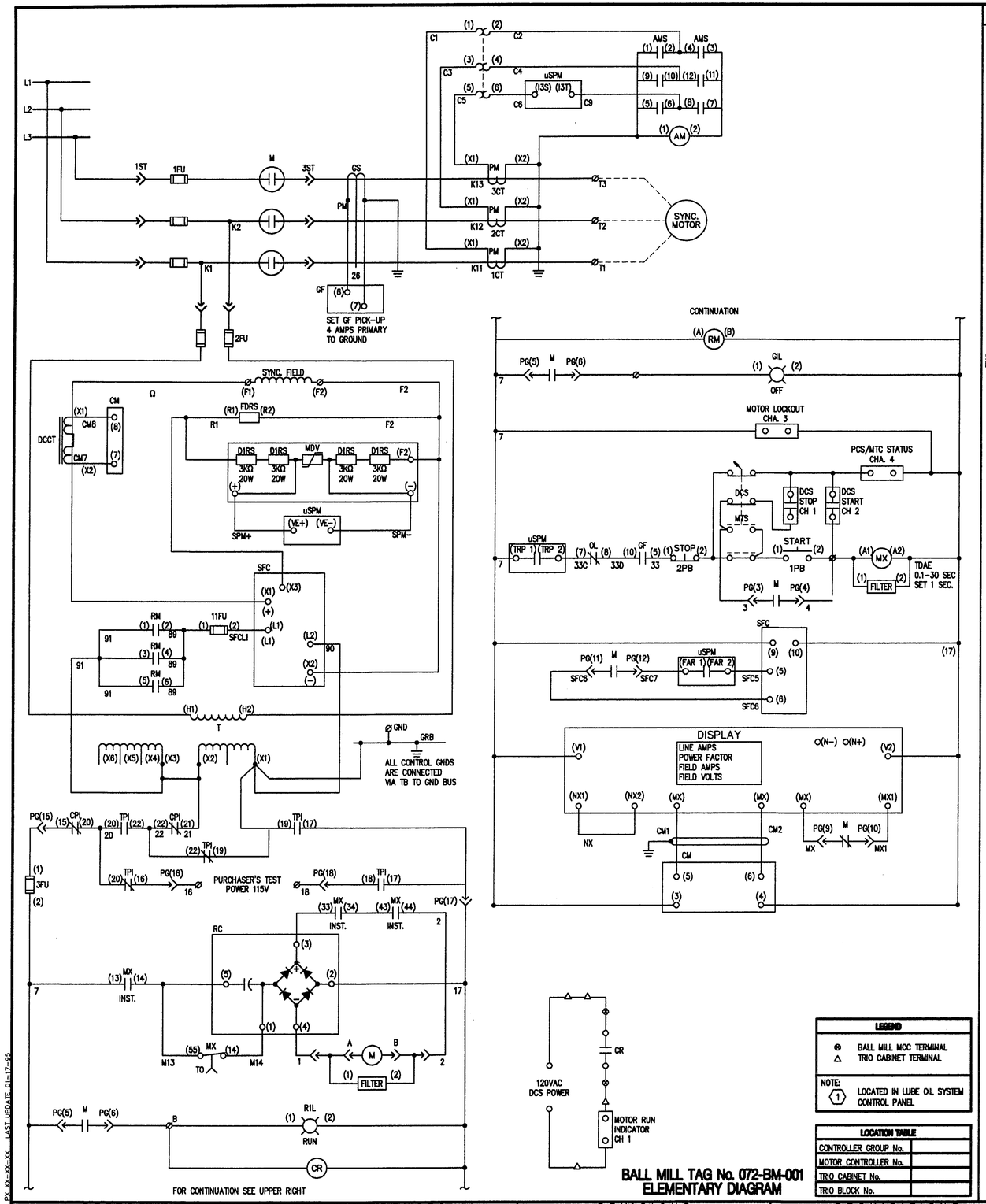

LEGEND	
⊗	BALL MILL MCC TERMINAL
△	TRIO CABINET TERMINAL
NOTE: (1)	LOCATED IN LUBE OIL SYSTEM CONTROL PANEL

LOCATION TABLE	
CONTROLLER GROUP No.	
MOTOR CONTROLLER No.	
TRIO CABINET No.	
TRIO BLOCK No.	

BALL MILL TAG No. 072-BM-001
ELEMENTARY DIAGRAM

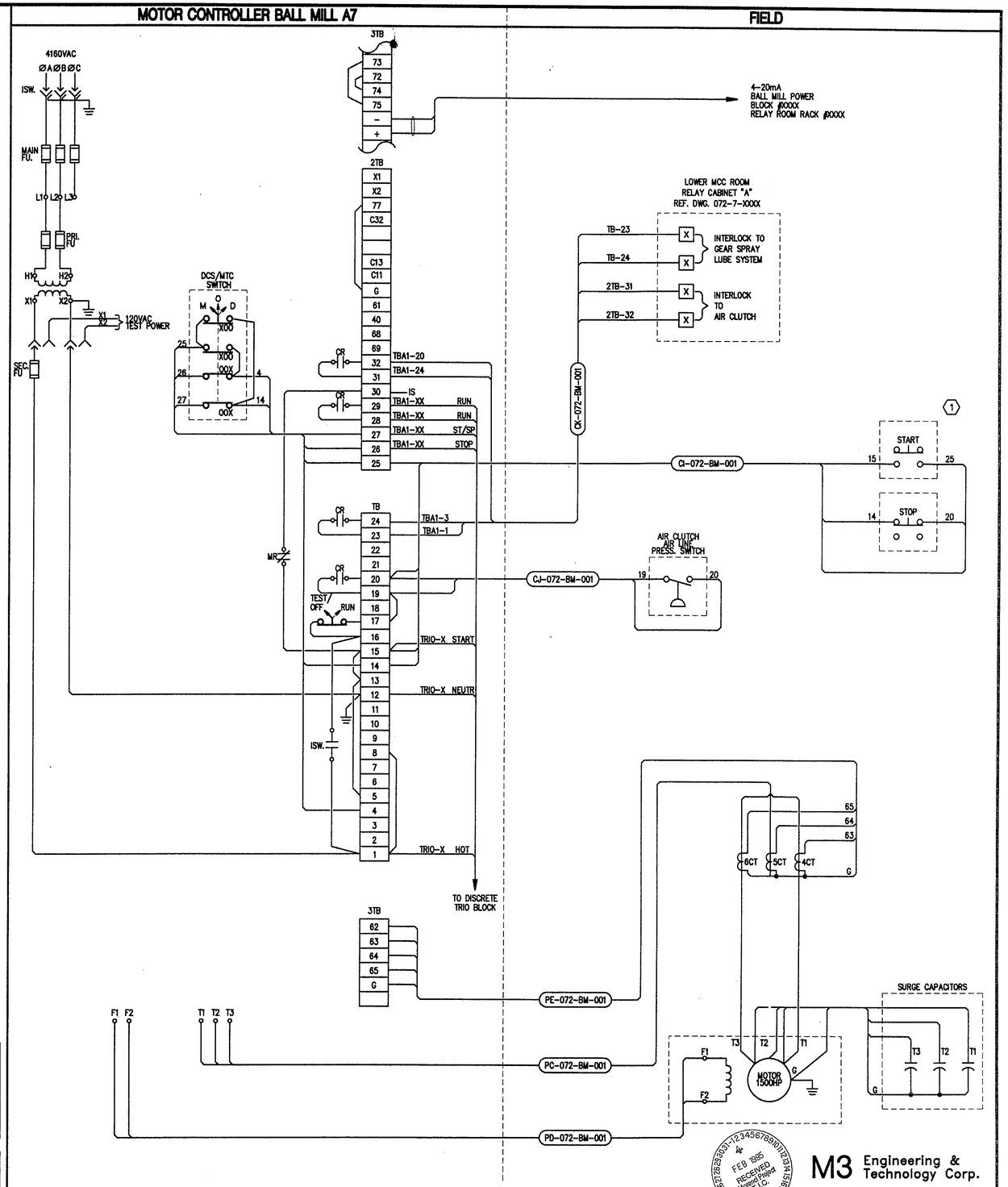

BALL MILL TAG No. 072-BM-001
INTERCONNECTION DIAGRAM

M3 Engineering & Technology Corp.
Tucson, Arizona
Tel.(602)293-1488 Fax.(602)293-8349
M3-PN94203

REFERENCES		REFERENCES		REVISIONS				REQUISITIONS			MISCELLANEOUS		
DWG. NO.	TITLE	DWG. NO.	TITLE	NO.	BY	DATE	DESCRIPTION	NO.	DATE	DESCRIPTION	NO.	DATE	DESCRIPTION

SCALE: NONE	DATE
DRAWN BY J.D.C.	JAN '95
TRACED BY	
CHECKED BY	
APPROVED BY	
ISSUED	

phelps dodge Morenci Inc.
MORENCI ENGINEERING DEPARTMENT
MORENCI, ARIZONA

METCALF CONCENTRATOR
GRINDING & CLASSIFYING
A7 BALL MILL
ELECTRICAL
4160V ELEM. & INTERCONNECT.
SHEET 1

JOB NO. MI-4113
DWG NO. 072-7-2057
ACCT. NO.
REV. NO. P3 7/20/95

LAST REV PX XX-XX-XX LAST UPDATE 01-17-95
7-2057.DWG